KRONENBERG

Retiring Cam RKMO

Operating Instructions

kronenberg-gmbh.de

Manufacturer

Hans & Jos. Kronenberg GmbH
D-51427 Bergisch Gladbach

Contact

Hans & Jos. Kronenberg GmbH
Kurt-Schumacher-Straße 1
D-51427 Bergisch Gladbach

T: +49 2204 / 207 -0
E: info@kronenberg-gmbh.de
W: kronenberg-gmbh.de

Document Information

Titel: kro_ba_rkmo_gb, as of: 09.06.2023

Legal Notices

Contents

1 General information

In these operating instructions you will find:

- information on installation, adjustment, maintenance and disposal of the retiring cam RKMO
- safety information
- assistance in case of malfunctions

Read these operating instructions carefully bevor you start using the retiring cam RKMO. Pay special attention to the safety instructions, as the failure to comply with them might result in severest injuries, environmental damage or damage to the device and to machines.

Keep these operating instructions in a safe and legible condition near the retiring cam RKMO. Only pass on the retiring cam RKMO to third parties with these operating instructions.

1.1 Key words and warning symbols used

Danger

Indicates an imminent danger for life and health of persons.

Warning

Indicates a possibly dangerous situation. Disregarding this warning may result in death or serious injury. This advice additionally warns of risks for machine, material or environment.

Attention

Indicates possible minor personal injury due to neglect.

Caution

Indicates possible material damage when disregarding the instructions or gives an important advice for the function.

Note

Indicates general information on the handling or the product.

2 Brief description

2.1 Retiring cam RKMO

Features and versions of the motor-driven retiring cam RKMO

features	• drive with maintenance-free three-phase motor • high actuation force up to 65 N • especially low total height of only 50 mm • large stroke up to 50 mm, adjustable • energy-saving due to low power requirement of only 1 A at 24 V and reduced holding current • duty cycle of any length (100 % duty cycle) • hardly perceptible unlocking and locking of the landing doors due to low noise emission
versions	• RKMO - 24DC - retiring cam RKMO with motor drive - 100 % ED - 24 V DC • RKMO - 230V - retiring cam RKMO with motor drive - 100 % ED - 100 V - 250 V AC or DC • other voltages on request (e.g. 48 V DC)

3 Intended use

The retiring cam RKMO:

- operates unlocking devices of landing doors in lift installations
- may only be used in a dry environment and outside EX-protected areas

Any other use is considered **improper** and may result in personal injury, environmental damage and / or property damage. In particular, the following are not permitted:

- repair, adjustment or modification of the retiring cam RKMO

Hans & Jos. Kronenberg GmbH do not assume any liability for damages caused by:

- improper or incorrect use
- use of non-approved spare or accessory parts
- non-observance of this manual

4 Overview retiring cam RKMO

The retiring cam RKMO is motor-driven and has the features and versions listed in chapter 2.1.

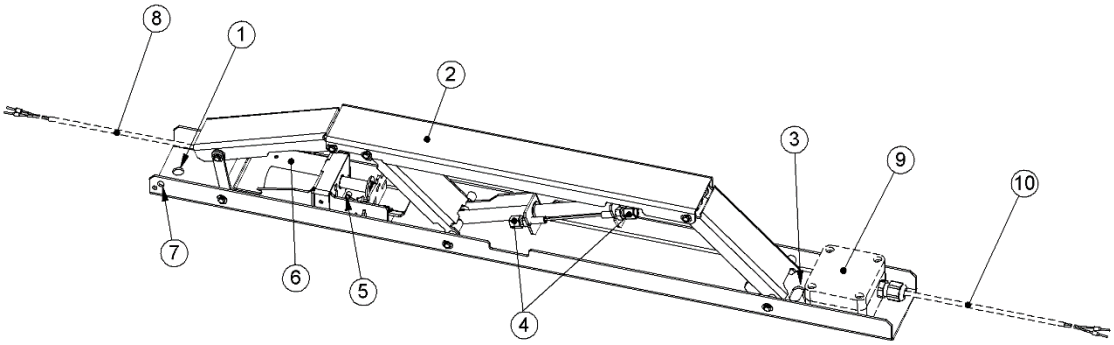

retiring cam RKMO* and its components

* Dimensioning and technical data can be found in chapter 8.

<u>components:</u>

1 upper fixing hole
2 upper sliding rail
3 lower fixing hole
4 adjusting screws for stroke limitation
5 limit switch (lower stroke limitation)
6 motor unit
7 protective conductor terminal
8 connection cable
9 power supply unit (only RKMO - 230V)
10 connection cable (only RKMO - 230V)

5 Installation

5.1 Mounting

Observe these specifications when mounting the retiring cam RKMO.

preparatory activities

- Check whether the operating and control voltage of the lift installation correspond to the voltage specification on the type label of the RKMO.
- Plan the routing of the connection cable.
- Make sure that the planned routing of the connection cable:
  - keeps sufficient distance from moving parts and
  - the fixing points are chosen in such a way that the cable routing does not change during operation and that no disturbances can occur in the lift installation.

procedure

Caution observe the operating position of the retiring cam RKMO!
The retiring cam RKMO may **only be installed vertically** and with the **motor upwards**!

- We recommend using the supplied mounting set for mounting the retiring cam RKMO on the car.
- Choose a mounting position for the RKMO:
  - depending on the local conditions
  - the components to be driven
- Make sure that all components that are driven by the retiring cam can be operated without error.
- Set the fixing holes according to dimensioning (see chapter 8).

fixing point above

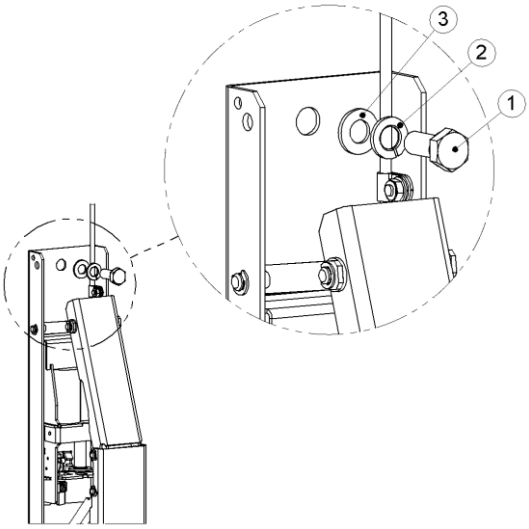

fixing point retiring cam RKMO above

Legend:

1 hexagon scew M8 x 16
2 spring washer
3 washer

… continued on next page

fixing point below

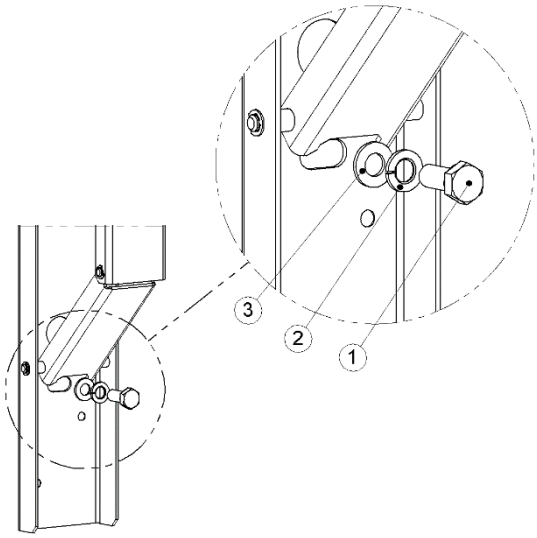

fixing point retiring cam RKMO below

Legend:

1 hexagon scew M8 x 16
2 spring washer
3 washer

5.2 Electrical connection

Danger – danger of death due to electrical current

Only a **qualified electrician** may connect the retiring cam RKMO to a properly installed power supply line. In addition to the safety instructions in this manual, always follow the country-specific regulations for installation, safety and accident prevention.

When working on the retiring cam RKMO, always make sure that the power supply is switched off and secured against unintentional reconnection.

The electrical connection may only be carried out in a de-energized state!

Warning – danger of crushing

When applying the power supply to the retiring cam RKMO, there is a risk of crushing due to the stroke movement of the cam.

Observe these specifications for the electrical connection of the retiring cam RKMO.

connection retiring cam RKMO - 24DC

Caution voltage supply RKMO - 24DC!
Do not connect the retiring cam RKMO-24DC to a pulsating DC voltage or a rectified AC voltage. There is the risk, that voltage peaks destroy the motor electronics.

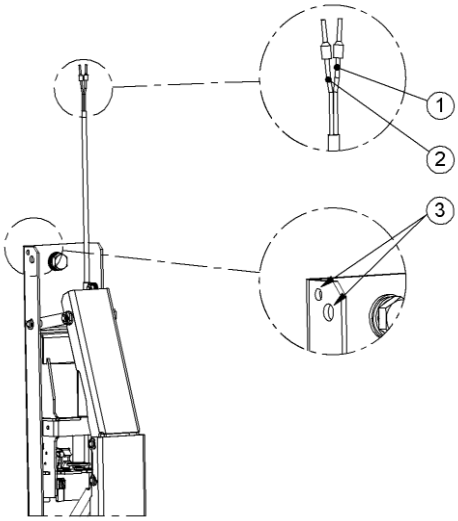

connection retiring cam RKMO - 24DC

Legend:

1 24 V DC, cable (brown)
2 0 V, cable (white)
3 earthing

connection retiring cam RKMO - 230V

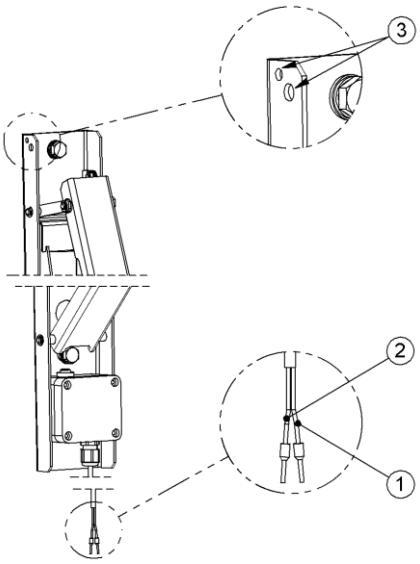

connection retiring cam RKMO - 230V

Legend:

1 N, cable (blue)
2 L, cable (brown)
3 earthing

5.3 Stroke adjustment

Warning – danger of crushing

The stroke adjustment may only be carried out in a de-energized state!

Observe these specifications for the stroke adjustment of the retiring cam RKMO.

important information

Caution

- The lower position of the sliding rail is not adjustable.
- You can only change the upper position of the sliding rail by means of 2 adjusting screws on the side cable pull. You thus define the desired stroke limit. (see also chapter 4)
- Set the stroke in such a way, that all components that are driven by the retiring cam RKMO are actuated without error.
  - A stroke that is set too small leads to uncertainties in the function of these components.
  - If the stroke is set too high, it may put unnecessary strain on the unlocking device and make the actuation more difficult in the event of a malfunction, e.g. when lifting or lowering the car in the event of an emergency release.

- You have 2 adjusting screws for the setting. In the first step start with only one of the two adjusting screws. You are free to choose which adjusting screw you use first. We recommend to only use the second set screw when the adjustment of the stroke limitation requires it.
- Make sure to turn the set screw only so far that its threaded end still protrudes at least 1 mm from the sheet metal angle.

… continued on next page

set stroke

- Loosen the counter nut before turning the set screw.
- Set the desired stroke:

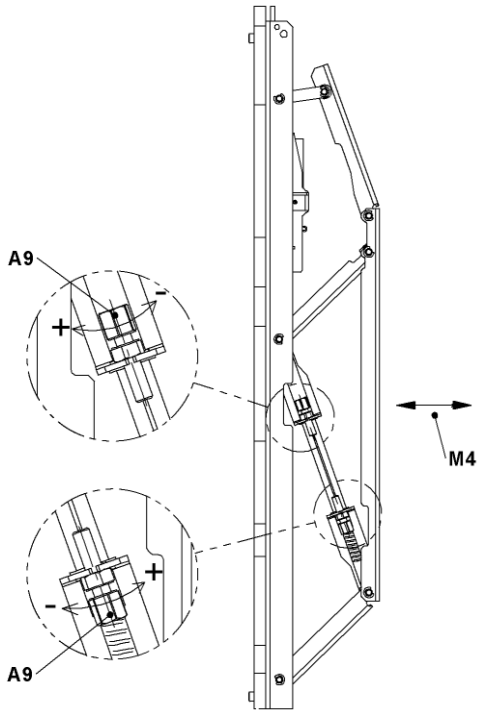

stroke setting

Legend:

A9 adjusting screw, (+): stroke larger, (-): stroke smaller
M4 stroke, adjustable 25 - 50 mm

completion

After adjustment tighten the counter nut and check the tightness of the counter nut on both adjusting screws.This ensures that the chosen stroke setting does not change during operation.

6 Initial operation

6.1 Functional test

Warning – danger of crushing

When applying the power supply to the retiring cam RKMO, there is a risk of crushing due to the stroke movement of the cam.

Observe this information for the functional test.

functional description	When the power supply is applied, the sliding rail of the retiring cam RKMO moves to its lower end position and remains there as long as the power supply is applied. When the power supply is switched off, the sliding rail leaves the lower end position and moves upwards to the position of the set stroke limit.
tests	Check that: • the movement of the sliding rail is consistent over the entire stroke in both directions • all components that are driven by the retiring cam RKMO are actuated without error • the chosen cable routing cannot lead to malfunctions during operation of the lift installation

6.2 Error diagnostics

The LED displays at the retiring cam RKMO form the basis in the error diagnostics.

legend of the LED display	The LED lights up:	(R)	red	(G) green
	The LED flashes:	(R)	red	(G) green
	The LED is off:	○		

6.2.1 Error cases recognizable via LED displays

<u>Error case:</u> The sliding rail does not tighten.

The following table describes the LED displays of the retiring cam RKMO in the above-mentioned error case.

→ red LED ○ → green LED ○	<u>possible cause(s):</u> • no voltage or voltage with reverse polarity* <u>measure(s):</u> • check voltage and if necessary polarity*

… continued on next page

→ red LED → green LED	R ○	possible cause(s): • voltage too low* measure(s): • check voltage, regulated 24 V DC +/- 10% required*
→ red LED → green LED	R G	possible cause(s): • voltage irregular or too low* measure(s): • check voltage, regulated 24 V DC +/- 10% required*

* only at RKMO 24 DC

Error case: The retiring cam RKMO makes beating noises when tightening, the sliding rail does not reach the lower end position.

The following table describes the LED displays of the retiring cam RKMO in the above-mentioned error case.

→ red LED → green LED	R G	possible cause(s): • mechanics blocked or damaged, motor torque not sufficient measure(s): • check mechanics for faults and ease of movement, remove blockage if necessary

6.2.2 further error cases

The following table describes further error cases without a possible LED display.

tightened sliding rail drops temporarily and then tightens again	possible cause(s): • short power failure or voltage dip measure(s): • Determine and eliminate cause of voltage dips, check switches, contacts, power supply, control, wiring and other consumers.
sliding rail makes beating noises when reaching the lower end position	possible cause(s): • The end position is not recognised; the microswitch does not switch because the mechanism is bent or blocked. measure(s): • Check microswitch and mechanics for faults, remove blockage if necessary.

7 Maintenance, storage, transport, disassembly and disposal

7.1 Maintenance

We recommend at every recurring maintenance of the installation:

- remove dust and dirt - relubrication is not necessary
- carry out a visual inspection for damage or wear
- check the stroke setting and correct it if necessary (see chapter 5.3).

Caution – Repair of a retiring cam RKMO

A damaged and/or faulty retiring cam RKMO must not be repaired and must be replaced with an original assembly from the manufacturer.

The manufacturer's EU declaration of conformity expires for a repaired assembly.

7.2 Storage

Store the retiring cam RKMO in a clean and dry place.

7.3 Transport

We recommend that you transport the retiring RKMO in the retracted state. Fix this state with an appropriate transport lock.

7.4 Disassembly and disposal

Danger – danger of death due to electrical current

Only a **qualified electrician** may disconnect the retiring cam RKMO from a properly installed power supply line. In addition to the safety instructions in this manual, always follow the country-specific regulations for installation, safety and accident prevention.

For all disassembly work on the retiring cam RKMO, make sure that the power supply is switched off and secured against unintentional reconnection.

The electrical connection must only be disconnected when the device is de-energized!

Dispose the component in accordance with the national regulations.

8 Data sheet

8.1 Dimensionings RKMO - 24DC

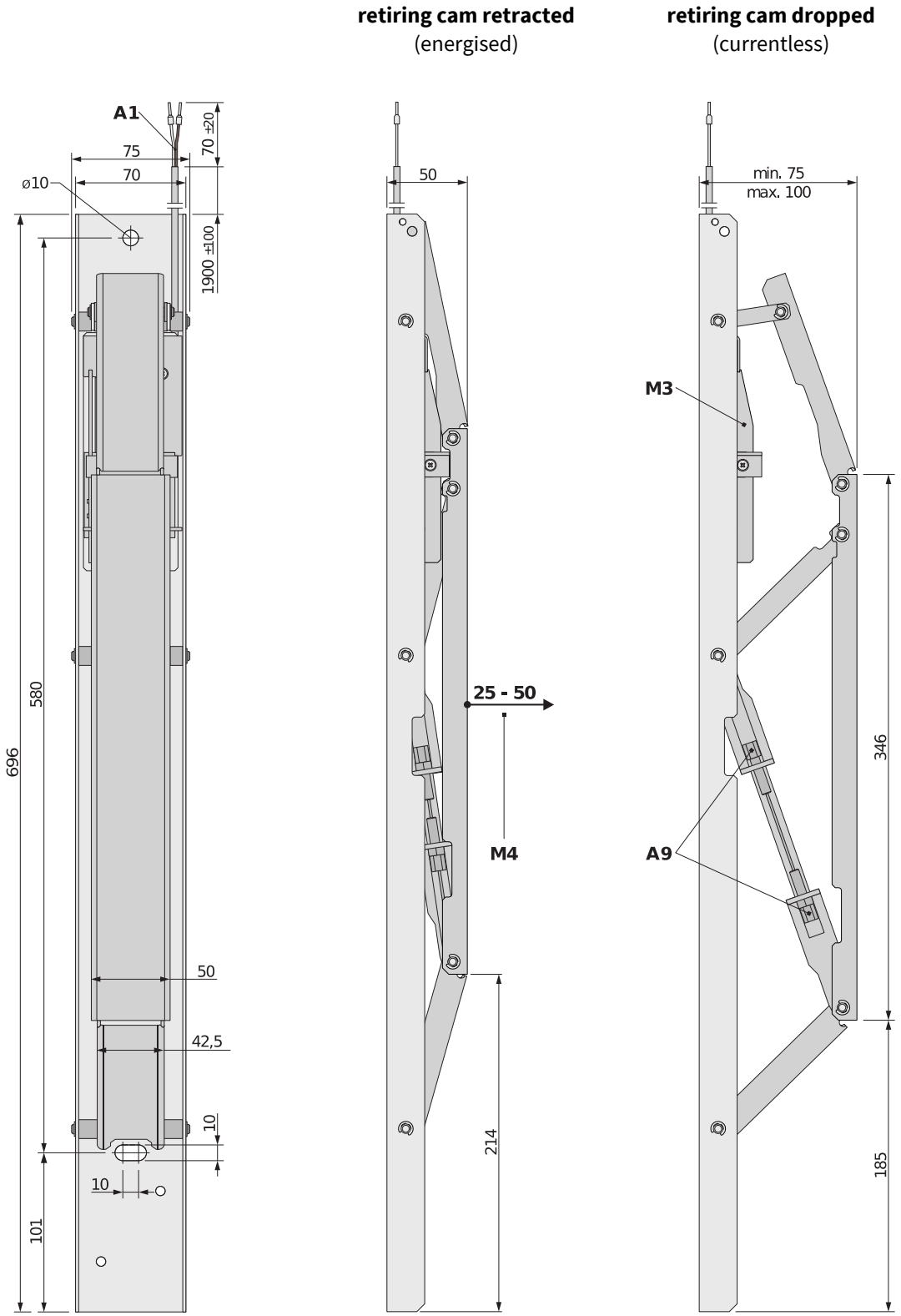

A1 2 m connection cable for 24 V DC
A9 setting screws for stroke adjustment
M3 customary position: motor drive above
M4 stroke, 25 - 50 mm

8.2 Dimensionings RKMO - 230V

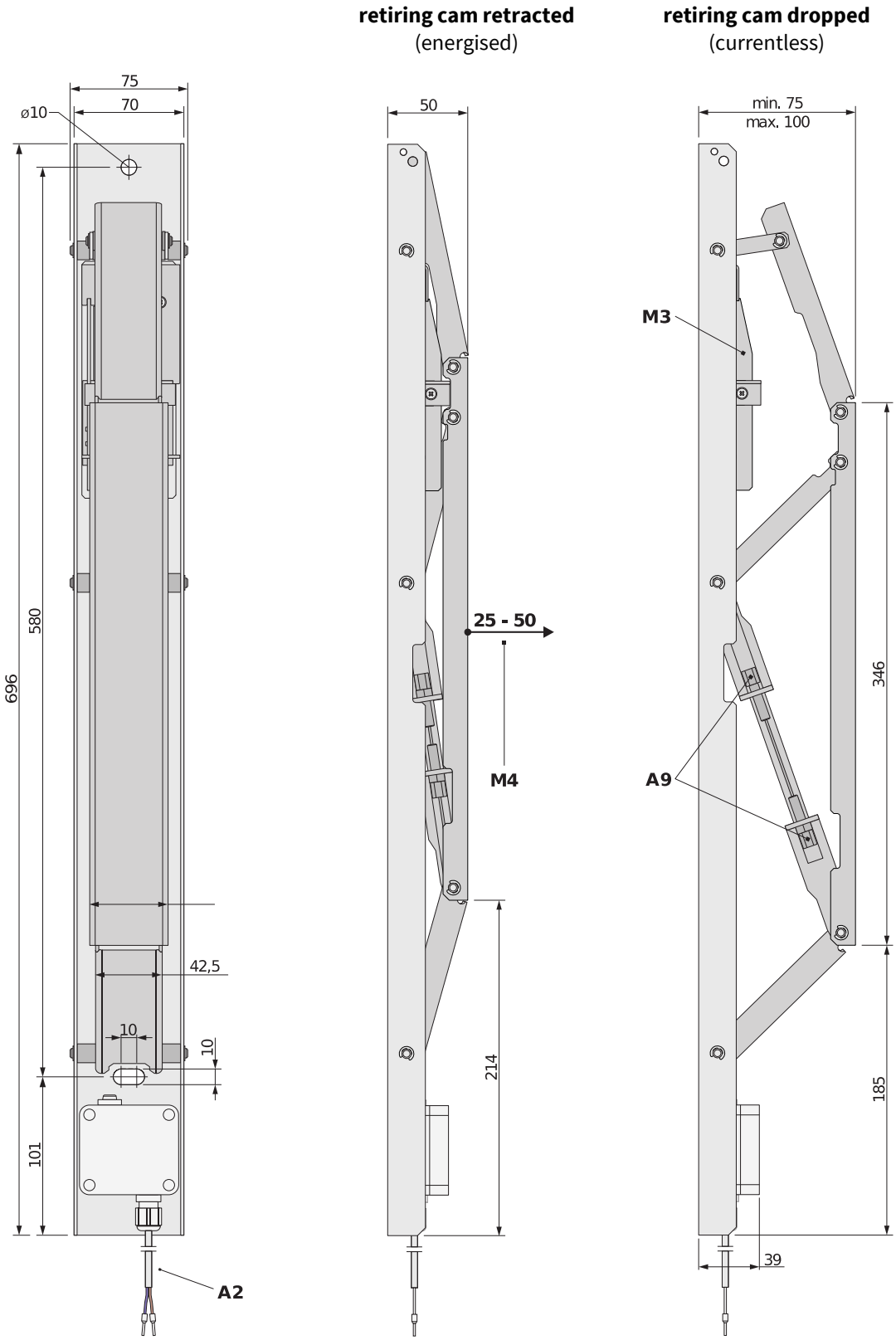

A1 3 m connection cable for 230 V AC/DC
A9 setting screws for stroke adjustment
M3 customary position: motor drive above
M4 stroke, 25 - 50 mm

8.3 Technical data

duty cycle	100 %	
total height	energised / retracted	50 mm
	currentless / dropped	75 - 100 mm adjustable
stroke	25 - 50 mm adjustable	
actuation force	65 N	
ambient air temperature	-10 °C up to +45 °C	
customary position	vertical, motor above	

RKMO - 24DC

nominal voltage	24 V DC stabilised/ regulated
admissable voltage range	21 V up to 30 V
maximum peak voltage	36 V
pull-in / holding current	1 A / 0.25 A
connection	2 m connection cable, 2 x 0.25 mm²
level of protection	IP00 (safety extra-low voltage)
weight	2.7 kg

RKMO - 230V

nominal voltage	100 V - 250 V AC or DC (rectified alternating voltage)
input current	0.4 A at 230 V AC
connection	3 m connection cable, 2 x 1 mm²
level of protection	IP20, insulated
weight	2.9 kg

8.4 Force-deflection graph

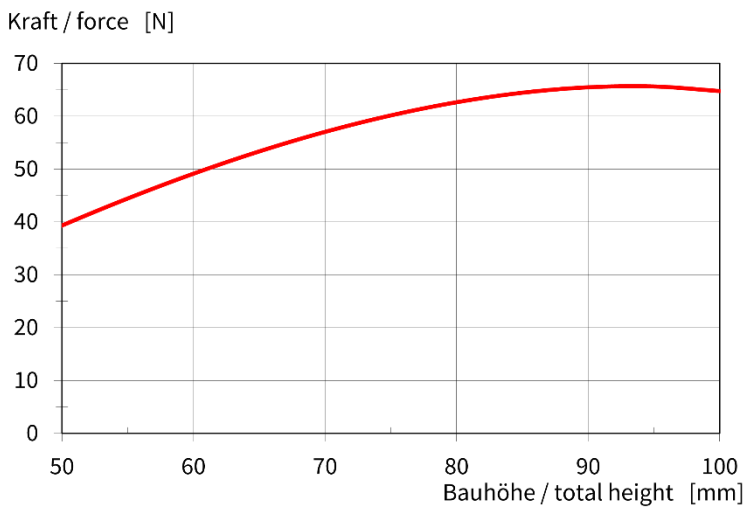

9 EU-Declaration of Conformity

The current version of the Declaration of Conformity is available for download on our homepage at kronenberg-gmbh.de.

Notes:

Hans & Jos. Kronenberg GmbH

Kurt-Schumacher-Straße 1 | D-51427 Bergisch Gladbach
T: +49 2204 / 207-0 | **E:** info@kronenberg-gmbh.de