INNOVATION THAT ELEVATES

Speedflex LED Shaft Lighting System

Installation Manual



Revision A · November 2026 · Draft

Elevator Equipment Limited
Unit A Gorse Hill Industrial Estate,
109-111 Boston Road,
Leicester, LE4 1AW
Tel: 0116 266 2241
www.elevatorequipment.co.uk

For use by competent lift engineers and qualified electricians only. Read the safety section before starting work.

INNOVATION THAT ELEVATES

Unit A Gorse Hill Industrial Estate, 109-111 Boston Road, Leicester, LE4 1AW
Tel: 0116 266 2241 · Fax: 0116 266 2242
sales@elevatorequipment.co.uk · www.elevatorequipment.co.uk

PLEASE READ THESE INSTRUCTIONS BEFORE STARTING INSTALLATION AND KEEP THEM FOR FUTURE REFERENCE.

Safety warning

These warnings are provided in the interest of safety. You must read them carefully before installing or using this equipment.

- All installation and servicing must be done by a qualified electrician or other competent person.
- It is dangerous to alter the specification or modify the product in any way.
- Make sure these instructions are passed on to the end user.
- The Speedflex and switches are designed for dry conditions and must not be exposed to rain or moisture.
- This product is suitable for mounting on surfaces of normal flammability (for example, wood and plasterboard). Do not mount it on highly flammable surfaces (for example, polystyrene tiles).
- Do not attach it to any surface that is freshly painted, damp or otherwise electrically conductive.
- Do not power on the Speedflex when it is coiled.
- Do not sharply bend the LED flex.
- Do not drop the LED flex down the lift shaft while holding only the cable.

Warning instructions

⚠ DO NOT POWER ON THE SPEEDFLEX WHEN IT IS COILED.

⚠ DO NOT SHARPLY BEND THE LED FLEX.

⚠ DO NOT DROP THE LED FLEX DOWN THE SHAFT WHILE HOLDING ONLY THE CABLE.

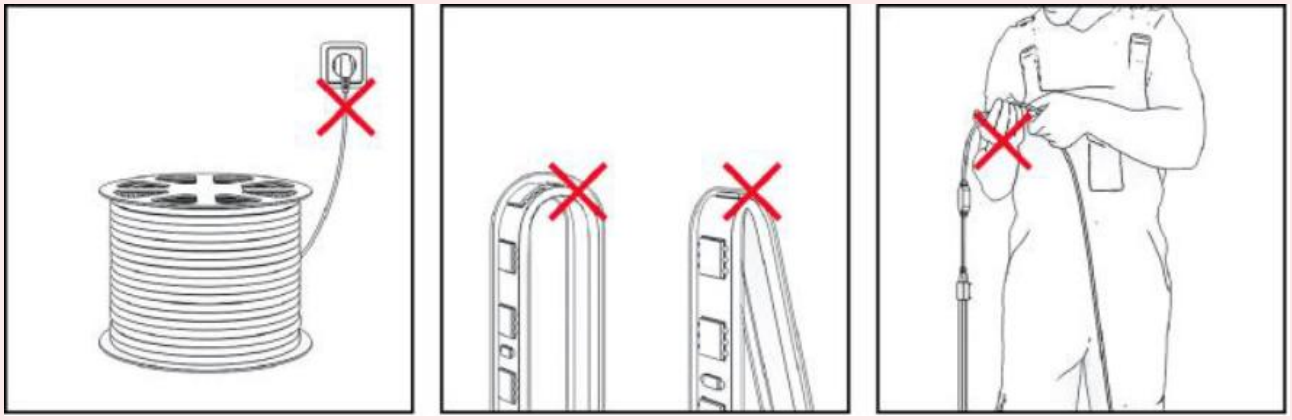

INNOVATION THAT ELEVATES

Unit A Gorse Hill Industrial Estate, 109-111 Boston Road, Leicester, LE4 1AW
Tel: 0116 266 2241 · Fax: 0116 266 2242
sales@elevatorequipment.co.uk · www.elevatorequipment.co.uk

LED flex

Parameter	Value
Power supply	230 V AC, 50 Hz
Lumens	620 lm
Current	2.5 A
Light colour	6500 K
IP rating	IP65
Power per metre	8.5 W
Beam angle	120°
Lifetime	30,000 hours

Emergency power pack

Parameter	Value
Power supply	230 V AC, 50 Hz
Emergency power	35 to 50 W
Battery type	14.8 V lithium-ion
Battery capacity	8 Ah
Emergency time	180 minutes
Recharging time	28 hours
Life cycle	5,000 cycles

NOTE: The emergency pack must be recharged every 3 months if it is not connected to a power supply. The emergency pack must be replaced after 3 years.

Unit A Gorse Hill Industrial Estate, 109-111 Boston Road, Leicester, LE4 1AW
Tel: 0116 266 2241 · Fax: 0116 266 2242
sales@elevatorequipment.co.uk · www.elevatorequipment.co.uk

Kinetic system

Parameter	Value
Power supply	230 V AC, 50 Hz
Power	300 W LED (800 W resistive load)
Radio frequency	RF 433 MHz
Wi-Fi	2.4 GHz
Signal range	80 m
Switch IP rating	IP42
Switch operations	100,000

Installation instructions

1. Installing the Speedflex

1. Lower the Speedflex down the lift shaft while holding it firmly underneath the connection point with the power cable.
2. Drill an 8 mm hole along the planned path of the Speedflex and insert a push-plug.
3. Secure the Speedflex to the push-plug with one of the cable ties provided, as shown below.
4. Continue installing the Speedflex by repeating steps 2 and 3.

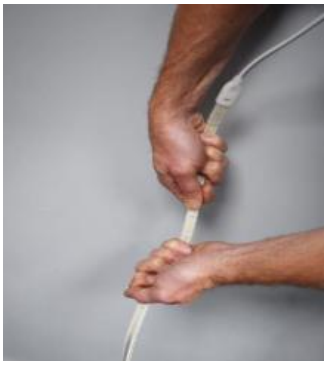



NOTE: Depending on the lift shaft walls, 2 or 3 fixings may be needed for the first metre at the top of the lift shaft. After that, one fixing every 2 to 3 metres should be enough.

Unit A Gorse Hill Industrial Estate, 109-111 Boston Road, Leicester, LE4 1AW
Tel: 0116 266 2241 · Fax: 0116 266 2242
sales@elevatorequipment.co.uk · www.elevatorequipment.co.uk

2. Installing the kinetic switches

Install the kinetic switches provided as shown in the drawing below. Switches can be fitted directly to the lift shaft wall, the lift car top or elsewhere as required. All necessary fixings are provided.

ⓐ Remove front cover;

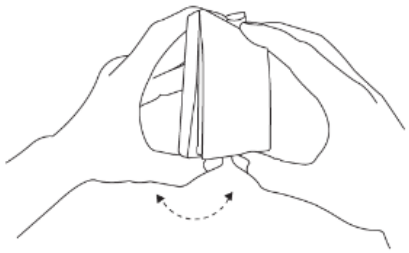

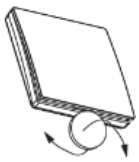

Inserting a coin into the switch gap and twisting it, can help to open the cover.

ⓑ Fix to back box;

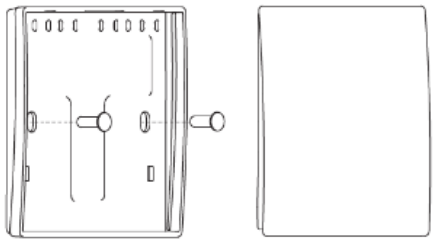

The kinetic switches come paired with the control unit as standard. Only follow the steps below if you are installing a replacement or an extra switch.

1. Pairing to kinetic switch - Standard method

ⓐ

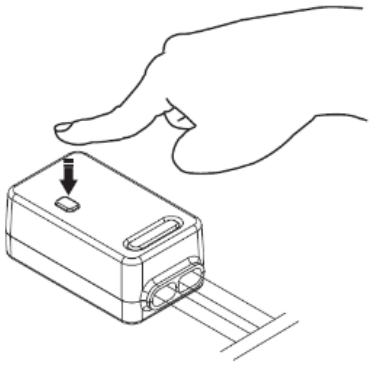

Press the Pairing Key for 3-4s, untill the RED indicator flash slowly.

ⓑ

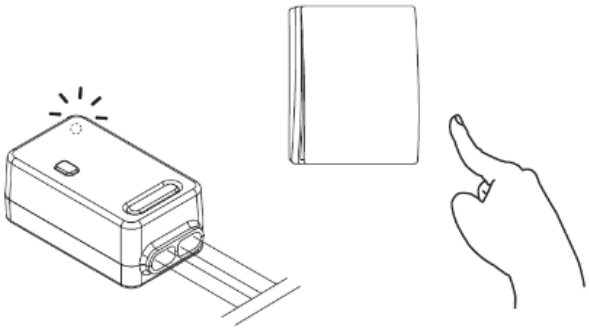

While the indicator on receiver flashes, press the Kinetic switch ONCE to complete the pairing.

3. Installing the main control unit

Install the main control unit in the lift motor room. If the LED light strip is over 30 metres long, install the main control unit inside the lift shaft, as low down from the top of the lift shaft as possible.

Connect the incoming 230 V AC mains supply to the power lead:

Unit A Gorse Hill Industrial Estate, 109-111 Boston Road, Leicester, LE4 1AW
Tel: 0116 266 2241 · Fax: 0116 266 2242
sales@elevatorequipment.co.uk · www.elevatorequipment.co.uk

Supply	Power lead
Live	Live
Neutral	Neutral
Earth	Earth

NOTE: The emergency power pack needs 28 hours to charge fully before the system can provide 3 hours of emergency backup.

INNOVATION THAT ELEVATES

Unit A Gorse Hill Industrial Estate, 109-111 Boston Road, Leicester, LE4 1AW
Tel: 0116 266 2241 · Fax: 0116 266 2242
sales@elevatorequipment.co.uk · www.elevatorequipment.co.uk

How to test

1. Switch the power on and press one switch to turn the lights on.
2. Press the other switches to turn the lights on and off.
3. To test the emergency backup system, press the yellow test button on the underside of the control unit, as pictured below.

Problem	Possible cause and solution
The Speedflex does not light up when it is powered on	The connection between the power cable and the Speedflex may have loosened. Check that the connection is sound. The power cable may be damaged or broken. Check its condition.
A segment in the middle of the Speedflex does not light up	The circuit of that segment may be broken.
The PVC coating of the Speedflex is stiff and difficult to bend or flex	The surrounding temperature may be too low.
The Speedflex gives off a strange smell and its PVC coating has overheated and softened	Heat can build up if the surrounding temperature is too high. Power off and allow the Speedflex to cool down. Do not store an unused Speedflex at a high temperature.

INNOVATION THAT ELEVATES

Unit A Gorse Hill Industrial Estate, 109-111 Boston Road, Leicester, LE4 1AW
Tel: 0116 266 2241 · Fax: 0116 266 2242
sales@elevatorequipment.co.uk · www.elevatorequipment.co.uk

Appendix A — Commissioning record

Field	Entry
Site address	
Lift identification number	
Shaft height (m)	
Strip length installed (m)	
Circuit reference and protective device	
Insulation resistance (MΩ)	
RCD trip time (ms)	
Lux — car roof, top floor	
Lux — car roof, mid-shaft	
Lux — pit floor	
Lux — lowest other reading	
Both switches tested	Yes / No
Lighting stays on with lift main switch off	Yes / No
Installed by (name, company)	
Date	
Signature	

INNOVATION THAT ELEVATES

Unit A Gorse Hill Industrial Estate, 109-111 Boston Road, Leicester, LE4 1AW
Tel: 0116 266 2241 · Fax: 0116 266 2242
sales@elevatorequipment.co.uk · www.elevatorequipment.co.uk

Appendix B — Warranty and support

The Speedflex LED Shaft Lighting System is covered by a One-year warranty from the date of installation, provided it is installed and maintained in line with this manual.

- Address: EEL, Unit A Gorse Hill Industrial Estate, 109-111 Boston Road, Leicester, LE4 1AW
- Technical support: 0116 2662241
- Email: sales@elevatorequipment.co.uk
- Website: www.elevatorequipment.co.uk